Atomic structure SL (answers)

IB CHEMISTRY SL

25	16		6	2	25
Mn	**S**	**J**	**C**	**He**	**Mn**
Manganese	Sulfur		Carbon	Helium	Manganese
54.938045	32.065		12.0107	4.002602	54.938045

2.1 The nuclear atom

Understandings:

- Atoms contain a positively charged dense nucleus composed of protons and neutrons (nucleons).
- Negatively charged electrons occupy the space outside the nucleus.
- The mass spectrometer is used to determine the relative atomic mass of an element from its isotopic composition.

Applications and skills:

- Calculations involving non-integer relative atomic masses and abundance of isotopes from given data, including mass spectra.
- Use the following notation $^{A}_{Z}\mathrm{X}$ to deduce the number of protons, neutrons and electrons in atoms and ions.

Guidance:

- Relative masses and charges of the subatomic particles should be known, actual values are given in section 4 of the data booklet. The mass of the electron can be considered negligible.
- Specific examples of isotopes need not be learned.
- The operation of a mass spectrometer is not required

Syllabus checklist

Objective	I am confident with this	I need to review this	I need help with this
State the name and location of the sub-atomic particles in an atom			
State the relative charge and relative mass of the sub-atomic particles			
State the meaning of the terms *atomic number* (*Z*) and *mass number* (*A*)			
Determine the number of protons, neutrons and electrons in an atom (or ion) from the atomic number and mass number (nuclear symbol notation)			
State the meaning of the term *isotope*			
Outline the concept of relative atomic mass (A_r)			
Calculate the relative atomic mass of an atom given % abundance and atomic mass data			
Calculate the % abundance given relative atomic mass and atomic mass data			

Structure of the atom and the sub-atomic particles

- The three sub-atomic particles are the proton, neutron and the electron.
- Protons and neutrons (nucleons) are located in the nucleus of the atom.
- The nucleus is very dense as it contains almost all of the mass of an atom.
- The electrons are located in energy levels (principal energy levels) within the atom.
- Atoms are electrically neutral because they have the same number of protons and electrons.

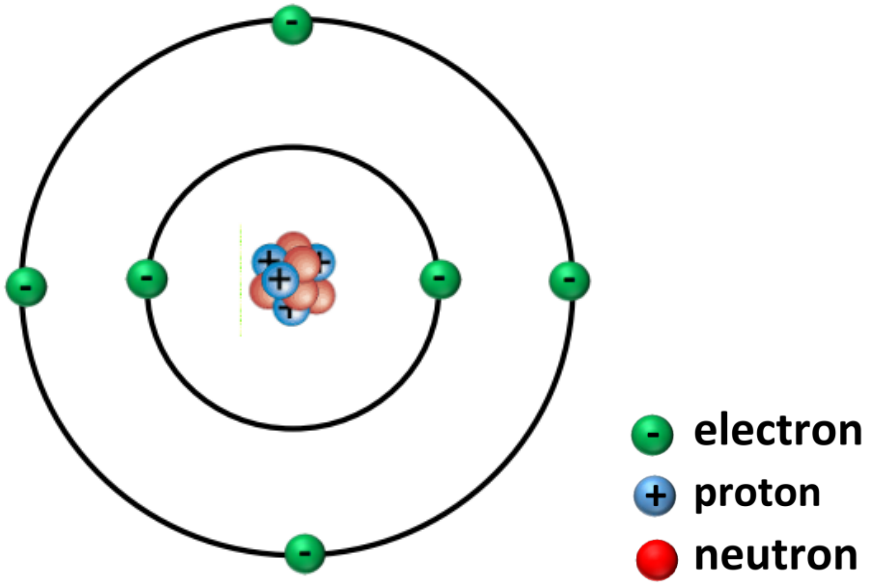

Exercises

1. Complete the table below:

Particle	Relative mass	Relative charge
proton	1	+1
neutron	1	No charge (neutral)
electron	1/2000	-1

2. Explain why the nucleus is the most dense part of the atom.

The nucleus contains the protons and neutrons (nucleons) that have much higher relative masses than the electrons that are found in energy levels around the nucleus.

3. An atom contains the same number of which sub-atomic particles?

Protons and electrons; protons are positive and electrons are negative. Equal numbers of protons and electrons mean that atoms are electrically neutral (have no overall charge).

Atomic number (*Z*) and mass number (*A*)

- The atomic number (or proton number) is the number of protons in the nucleus of an atom.
- The mass number is the number of protons and neutrons (nucleons) in the nucleus of an atom.
- To find the number of neutrons in the nucleus of an atom, subtract the atomic number from the mass number ($A - Z$).
- The notation used for the atomic number and mass number is shown below (the nuclear symbol notation).

$$^{A}_{Z}\mathrm{X} \qquad ^{19}_{9}\mathrm{F} \qquad ^{19}\mathrm{F}$$

- X is the symbol of the element
- *Z* is the atomic number (or proton number)
- *A* is the mass number (or nucleon number)

*Note that the atomic number is sometimes omitted; it can be found by looking on the periodic table. You **should** include it when writing the nuclear notation for an element.*

Example: The nuclear symbol for helium-4 is $^{4}_{2}\mathrm{He}$. Its atomic number is 2 and its mass number is 4. It has 2 protons and 2 neutrons in its nucleus.

Isotopes

- Isotopes are atoms of the same element that have the same number of protons but a different number of neutrons.
- Isotopes have the same atomic number (*Z*) but a different mass number (*A*).
- The two isotopes shown below, carbon-12 (^{12}C) and carbon-14 (^{14}C), have the same number of protons but different numbers of neutrons.

$^{12}_{6}\mathrm{C}$ 6 protons **6 neutrons** 6 electrons

$^{14}_{6}\mathrm{C}$ 6 protons **8 neutrons** 6 electrons

- Isotopes have the same chemical properties but different physical properties such as density and boiling point.
- Many isotopes are radioactive (known as radioisotopes); examples include cobalt-60, carbon-14 and iodine-131.

Exercises

1. Define the terms atomic number and mass number.

   Atomic number, *Z*, is the number of protons in the nucleus of an atom.

   Mass number, *A*, is the number of protons and the number of neutrons in the nucleus of an atom.

2. Write the nuclear symbol notation for magnesium-24 and iron-54

   $^{24}_{12}Mg$ $^{54}_{26}Fe$

3. Define the term isotope.

   Isotopes are atoms of the same element have the same atomic number (same number of protons) but a different mass number (different numbers of neutrons).

4. Deduce the number of protons, neutrons and electrons in the following.

Species*	Atomic number	Mass number	Number of protons	Number of neutrons	Number of electrons
$^{2}_{1}H$	1	2	1	1	1
$^{14}_{6}C$	6	14	6	8	6
$^{14}_{7}N$	7	14	7	7	7
$^{40}_{20}Ca$	20	40	20	20	20
$^{37}_{17}Cl$	17	37	17	20	17
$^{79}_{35}Br$	35	79	35	44	35
$^{206}_{82}Pb$	82	206	82	124	82
$^{235}_{92}U$	92	235	92	143	92

*The word species is used to refer to an atom, ion, or molecule.

5. Deduce the number of protons, neutrons and electrons in the following isotopes.

Isotope	Atomic number	Mass number	Number of protons	Number of neutrons	Number of electrons
$^{10}_{5}B$	5	10	5	5	5
$^{11}_{5}B$	5	11	5	6	5
$^{16}_{8}O$	8	16	8	8	8
$^{17}_{8}O$	8	17	8	9	8

6. Deduce the number of protons, neutrons and electrons in the following ions.

Ion	Atomic number	Mass number	Number of protons	Number of neutrons	Number of electrons
$^{40}_{20}Ca^{2+}$	20	40	20	20	18
$^{27}_{13}Al^{3+}$	13	27	13	14	10
$^{35}_{17}Cl^{-}$	17	35	17	18	18
$^{14}_{7}N^{3-}$	7	14	7	7	10

Relative atomic mass (A_r)

- The mass of atoms is so small (in the range of 10^{-24} to 10^{-22} kg), therefore a relative scale is used.
- The standard for the relative scale is carbon-12, which is given a relative mass of exactly 12.00.

The relative atomic mass is the weighted average mass of an atom compared to an atom of the isotope carbon-12.

- Relative atomic masses do not have units because it is a relative scale.

The mass spectrometer (note that the operation of mass spectrometer is **not required**)

- A mass spectrometer is used to determine the isotopes of an element, together with their relative abundances.
- The relative abundance of an isotope is the percentage of atoms with a specific atomic mass found in a naturally occurring sample of an element.
- A mass spectrometer produces a mass spectrum which shows relative abundance on the *y*-axis against mass to charge ratio (m/z) on the *x*-axis. The mass spectrum for lead (Pb) is shown below.

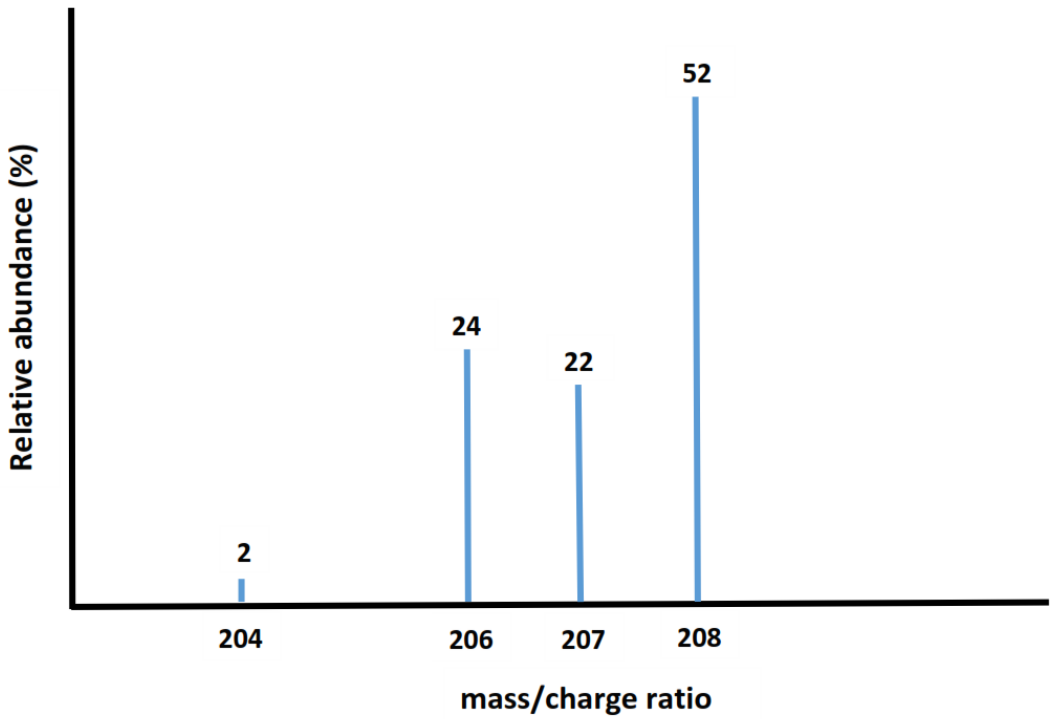

Exercise Based on the mass spectrum above, is the relative atomic mass of lead likely to be closer to 204 or 208? Explain your answer.

Closer to 208 because ^{208}Pb has a relative abundance of 52%.

Calculating relative atomic mass

- To calculate the relative atomic mass of an element, multiply the mass of each isotope by its relative abundance, add together for all the isotopes, and then divide by 100.
- For example, to calculate the relative atomic mass of an element with two isotopes:

$$A_r = \frac{(\text{mass of isotope 1} \times \%\text{ abundance}) + (\text{mass of isotope 2} \times \%\text{ abundance})}{100}$$

Exercises

1. Rhenium has two naturally occurring isotopes with the following percentage abundances. Calculate the relative atomic mass of rhenium to two decimal places.

Isotope	% abundance
^{185}Re	37.40
^{187}Re	62.60

$$A_r = \frac{(185 \times 37.40) + (187 \times 62.60)}{100}$$

$$A_r = 186.25$$

2. Europium has two naturally occurring isotopes, Europium-151 and Europium-153, and a relative atomic mass of 151.96. Calculate the percentage abundance of each isotope of europium.

$$153.96 = \frac{151x + 153\,(100 - x)}{100}$$

$$x = 52\%$$

48 % Europium-153

52 % Europium-151

2.2 Electron configurations

Understandings:

- Emission spectra are produced when photons are emitted from atoms as excited electrons return to a lower energy level.
- The line emission spectrum of hydrogen provides evidence for the existence of electrons in discrete energy levels, which converge at higher energies.
- The main energy level or shell is given an integer number, n, and can hold a maximum number of electrons, $2n^2$.
- A more detailed model of the atom describes the division of the main energy level into s, p, d and f sub-levels of successively higher energies.
- Sub-levels contain a fixed number of orbitals, regions of space where there is a high probability of finding an electron.
- Each orbital has a defined energy state for a given electronic configuration and chemical environment and can hold two electrons of opposite spin

Applications and skills:

- Description of the relationship between colour, wavelength, frequency and energy across the electromagnetic spectrum.
- Distinction between a continuous spectrum and a line spectrum.
- Description of the emission spectrum of the hydrogen atom, including the relationships between the lines and energy transitions to the first, second and third energy levels.
- Recognition of the shape of an s atomic orbital and the p_x, p_y and p_z atomic orbitals.
- Application of the Aufbau principle, Hund's rule and the Pauli exclusion principle to write electron configurations for atoms and ions up to $Z = 36$.

Guidance:

- Details of the electromagnetic spectrum are given in the data booklet in section 3.
- The names of the different series in the hydrogen line emission spectrum are not required.
- Full electron configurations (e.g $1s^2\ 2s^2\ 2p^6\ 3s^2\ 3p^4$) and condensed electron configurations (e.g [Ne] $3s^2\ 3p^4$) should be covered.
- Orbital diagrams should be used to represent the character and relative energy of orbitals. Orbital diagrams refer to arrow-in-box diagrams, such as the one given below.

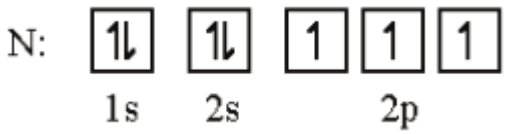

- The electron configurations of Cr and Cu as exceptions should be covered.

Syllabus checklist

Objective	I am confident with this	I need to review this	I need help with this
Deduce electron configurations for atoms (or ions) up to $Z = 36$			
State the shapes of s and p atomic orbitals			
State the maximum number of electrons in the s and p sub-levels			
State the maximum number of electrons in each main energy level (up to n=4)			
Write electron configurations (full and abbreviated) for atoms (or ions) up to $Z = 36$			
Outline the exceptions to the Aufbau principle (Cu and Cr)			
Draw electron in box diagrams for atoms (or ions)			
Outline the relationship between energy, frequency and wavelength (and colour) on the electromagnetic spectrum			
Describe the difference between a continuous spectrum and a line spectrum			
Explain the formation of the emission and absorption spectra			
Describe the hydrogen emission spectrum			
Explain the relationship between the lines and electron transitions to the first, second and third energy levels in the hydrogen emission spectrum (in terms in energy, frequency and wavelength)			

Electron configurations

- The Bohr model of the atom has the electrons located in energy levels (principal energy levels) which are assigned the letter *n*.

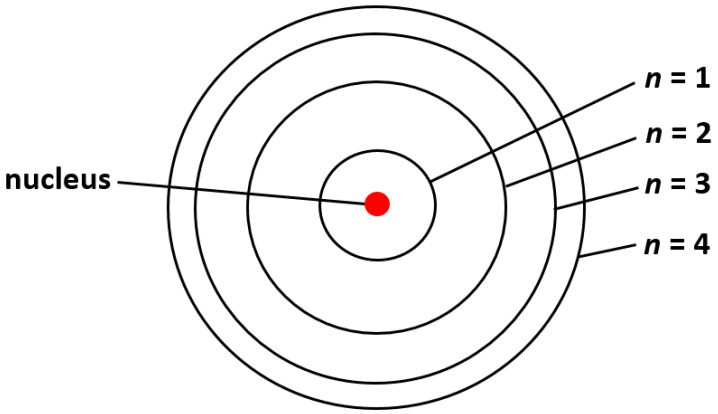

- *n*=1 is closest to the nucleus and has lowest energy. As the value of *n* increases, the energy also increases.
- Each main energy level can hold $2n^2$ electrons.
- The main energy levels are divided into sub-levels: s, p, d and f.
- The order in terms of energy of the sub-levels is: s < p < d < f (s is lowest and f is highest).

Energy level	sub-level	maximum number of electrons in sub-level	maximum number of electrons in level
n = 1	1s	2	2
n = 2	2s	2	8
	2p	6	
n = 3	3s	2	18
	3p	6	
	3d	10	
n = 4	4s	2	32
	4p	6	
	4d	10	
	4f	14	

Summary:

- The s sub-level can hold a maximum of 2 electrons.
- The p sub-level can hold a maximum of 6 electrons.
- The d sub-level can hold a maximum of 10 electrons.
- The f sub-level can hold a maximum of 14 electrons.

Atomic orbitals

- Atomic orbitals describe the probability of finding an electron in an area of space.
- They represent the region around the nucleus where there is a 95% chance of finding an electron.

s atomic orbitals

- s orbitals are spherical in shape.

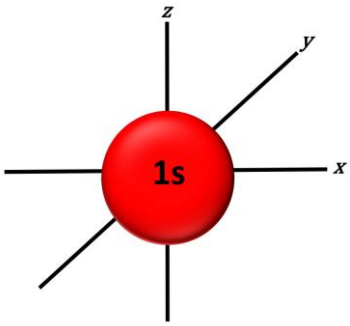

p atomic orbitals

- A p orbital is like 2 identical balloons tied together at the centre (dumbbell shaped).
- sub-level contains 3 p orbitals of equal energy (degenerate orbitals).

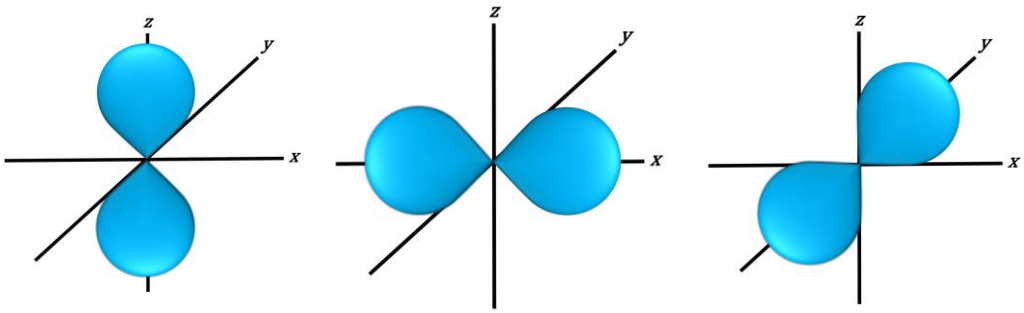

d and f atomic orbitals

- The d sub-level contains five degenerate d orbitals.
- The f sub-level contains seven degenerate f orbitals.
- Students are not required to know the shapes of d and f atomic orbitals.

The Aufbau Principle

- The Aufbau Principle states that electrons are placed into orbitals of lowest energy first.
- The following diagram shows the sub-levels in order of increasing energy.
- Note the overlap between the 4s and 3d sub-levels.

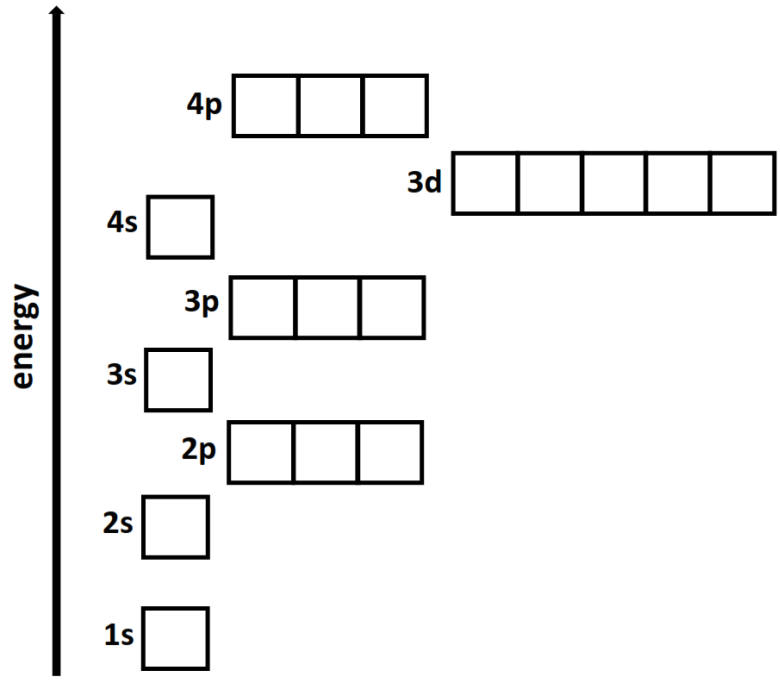

- The filling of the sub-levels follows the pattern below.

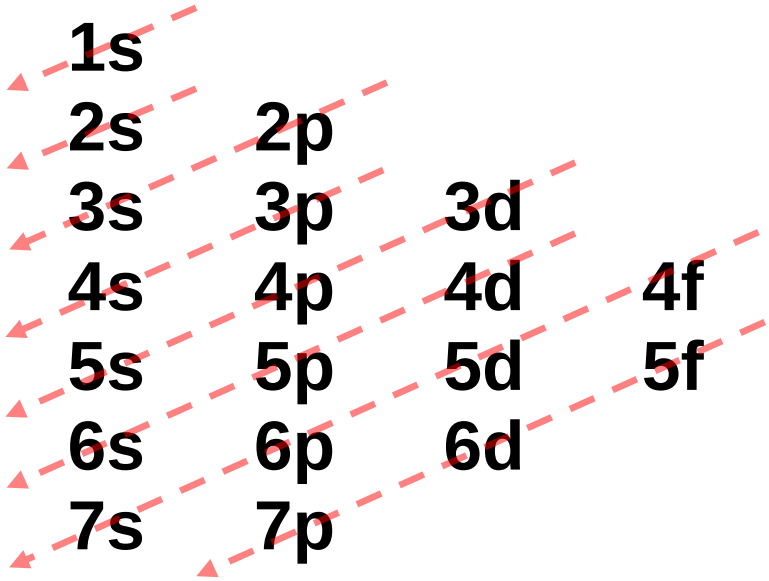

Electron spin and the Pauli Exclusion Principle

- The Pauli Exclusion Principle states that no two electrons in the same orbital can have the same quantum number.
- This means that no more than two electrons can occupy an orbital and they must spin in opposite directions.
- Electrons and their spins are represented by single-headed arrows (↑ or ↓).

Hund's rule

- Hund's rule states that if more than one degenerate orbital in a sub-level is available, electrons occupy separate orbitals with parallel spins.
- Always fill orbitals of equal energy singly with one electron first and then add the second electron once each orbital has one electron in it.

Writing electron configurations

- Electron configurations show how electrons are arranged in sub-levels.
- The first number shows the main energy level (or principal quantum number).
- The letter shows the sub-level (s, p, d or f).
- The number in superscript shows the number of electrons in the sub-level.

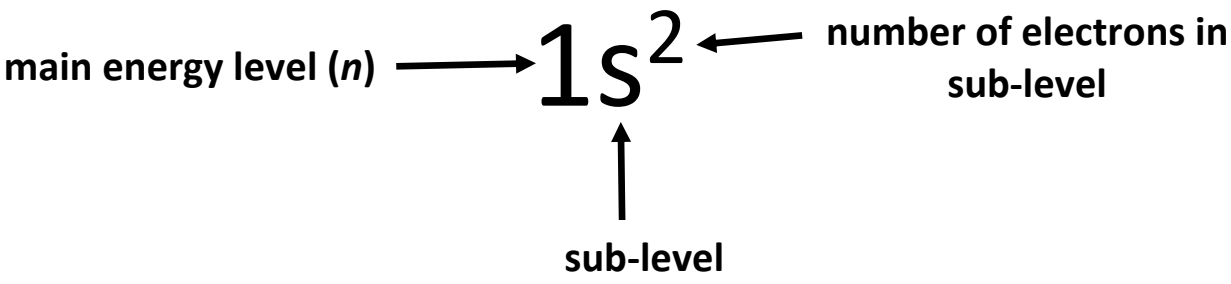

Example: Write the full electron configuration of the magnesium atom (*Z*=12)

$1s^2\ 2s^2\ 2p^6\ 3s^2$

Abbreviated (condensed) electron configurations

Example – the full and abbreviated electron configuration of rubidium (Rb) are shown below

- Rb $1s^2\ 2s^2\ 2p^6\ 3s^2\ 3p^6\ 4s^2\ 3d^{10}\ 4p^6\ 5s^1$
- Rb [Kr] $5s^1$

Write the abbreviated electron configuration for Al:

- Al $1s^2\ 2s^2\ 2p^6\ 3s^2\ 3p^1$
  [Ne] $3s^2\ 3p^1$

Concept check:
Write **full** electronic configurations for the following atoms:

1) He $1s^2$
2) Li $1s^2\ 2s^1$
3) B $1s^2\ 2s^2\ 2p^1$
4) C $1s^2\ 2s^2\ 2p^2$
5) O $1s^2\ 2s^2\ 2p^4$
6) Ne $1s^2\ 2s^2\ 2p^6$
7) Na $1s^2\ 2s^2\ 2p^6\ 3s^1$
8) Al $1s^2\ 2s^2\ 2p^6\ 3s^2\ 3p^1$
9) P $1s^2\ 2s^2\ 2p^6\ 3s^2\ 3p^3$
10) Cl $1s^2\ 2s^2\ 2p^6\ 3s^2\ 3p^5$
11) Ar $1s^2\ 2s^2\ 2p^6\ 3s^2\ 3p^6$
12) Ca $1s^2\ 2s^2\ 2p^6\ 3s^2\ 3p^6\ 4s^2$
13) Ti $1s^2\ 2s^2\ 2p^6\ 3s^2\ 3p^6\ 4s^2\ 3d^2$
14) Mn $1s^2\ 2s^2\ 2p^6\ 3s^2\ 3p^6\ 4s^2\ 3d^5$
15) Ni $1s^2\ 2s^2\ 2p^6\ 3s^2\ 3p^6\ 4s^2\ 3d^8$
16) Zn $1s^2\ 2s^2\ 2p^6\ 3s^2\ 3p^6\ 4s^2\ 3d^{10}$
17) Ge $1s^2\ 2s^2\ 2p^6\ 3s^2\ 3p^6\ 4s^2\ 3d^{10}\ 4p^2$
18) Se $1s^2\ 2s^2\ 2p^6\ 3s^2\ 3p^6\ 4s^2\ 3d^{10}\ 4p^4$
19) Br $1s^2\ 2s^2\ 2p^6\ 3s^2\ 3p^6\ 4s^2\ 3d^{10}\ 4p^5$
20) Kr $1s^2\ 2s^2\ 2p^6\ 3s^2\ 3p^6\ 4s^2\ 3d^{10}\ 4p^6$

Write abbreviated (condensed) electron configurations for the following atoms:

11) Li [He] $2s^1$

12) Mg [Ne] $3s^2$

13) S [Ne] $3s^2\ 3p^4$

14) Ca [Ar] $4s^2$

15) Ga [Ar] $4s^2\ 3d^{10}\ 4p^1$

Electron configurations of ions

- Note that First row d-block elements (Sc to Zn) lose their 4s electrons first when they form ions.

Write the electron configuration for the Ni^{2+} ion:

$1s^2\ 2s^2\ 2p^6\ 3s^2\ 3p^6\ 3d^8$

Write the electron configuration for the Mn^{2+} ion:

$1s^2\ 2s^2\ 2p^6\ 3s^2\ 3p^6\ 3d^5$

Exercise: write abbreviated (condensed) electron configurations for the following ions:

1) Na^+ [He] $2s^2\ 2p^6$

2) S^{2-} [Ne] $3s^2\ 3p^6$

3) Ca^{2+} [Ne] $3s^2\ 3p^6$

4) Cr^{3+} [Ar] $3d^3$

5) Cu^+ [Ar] $3d^{10}$

Exceptions to the Aufbau principle – copper (Cu) and chromium (Cr)

Copper Z=29

- The full electron configuration for the Cu atom is:
  $1s^2\ 2s^2\ 2p^6\ 3s^2\ 3p^6\ 4s^1\ 3d^{10}$

Chromium Z= 24

- The abbreviated electron configuration for the Cr atom is:
  $1s^2\ 2s^2\ 2p^6\ 3s^2\ 3p^6\ 4s^1\ 3d^5$

Orbital diagrams – electrons in boxes

- Boxes can be used to represent the atomic orbitals with single headed arrows used to represent the spinning electrons.
- Recall that electrons fill orbitals according to Hund's rule and the Pauli exclusion principle; an orbital can hold a maximum of two electrons which must have opposite spins, ↑ or ↓, and electrons fill degenerate orbitals singly before being doubly occupied.

Exercises:

1. Draw electrons in boxes (orbital diagrams) for the first 7 elements below:

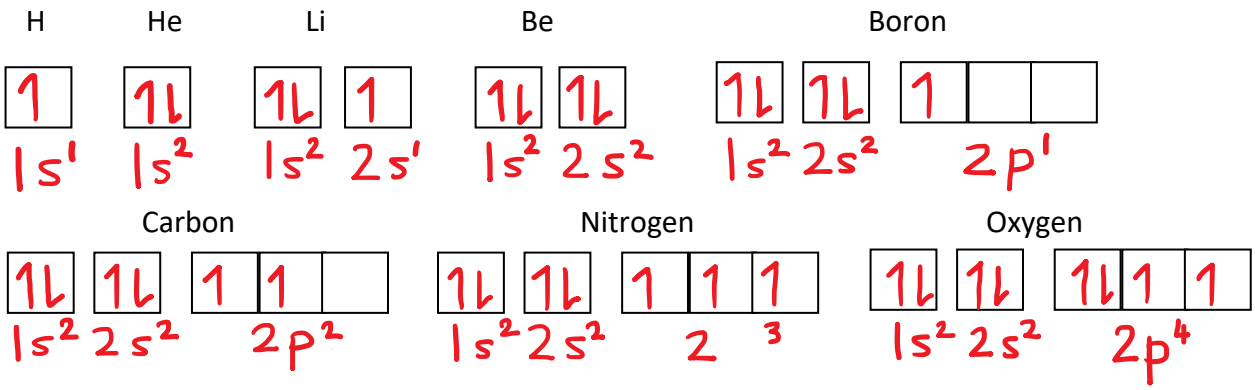

2. Draw orbital diagrams for the following showing only the 4s and 3d sub-levels.

1) Ca

2) V

3) Mn

4) Cr^{3+}

5) Cu^{2+}

Answers

1) [Ar]$4s^2$

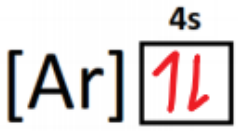

2) [Ar]$4s^2 3d^3$

3) [Ar]$4s^2 3d^5$

4) [Ar]$3d^3$

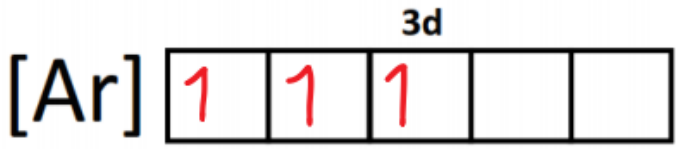

5) [Ar]$3d^9$

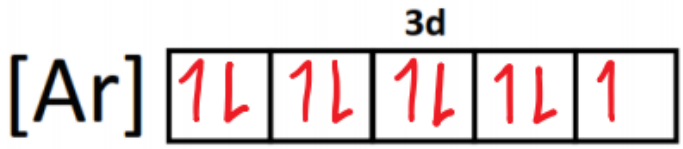

The electromagnetic spectrum

- The electromagnetic spectrum is the range of wavelengths, or frequencies, of electromagnetic radiation.
- It extends from radio rays (low energy, long wavelength, low frequency) to gamma rays (high energy, short wavelength, high frequency).

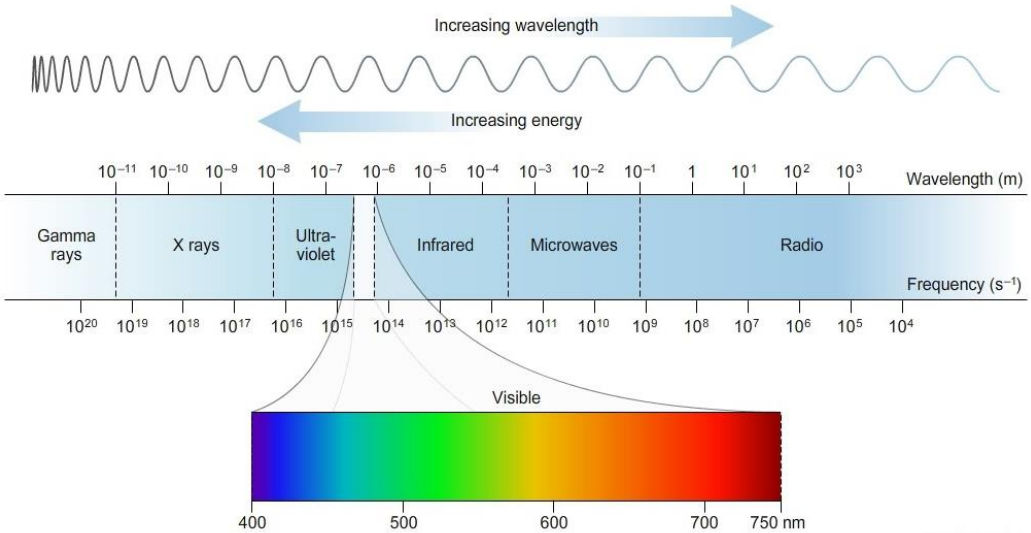

y

- Higher energy corresponds to higher frequency and shorter wavelength.
- Lower energy corresponds to lower frequency and longer wavelength.

Exercises

1. Write the following in order of increasing energy.

   radio waves, microwaves, infrared, visible, ultraviolet, X-rays, gamma

2. Write the following in order of increasing wavelength.

   gamma, X-rays, ultraviolet, visible, infrared, microwaves, radio waves

3. Write the following in order of increasing frequency.

   radio waves, microwaves, infrared, visible, ultraviolet, X-rays, gamma

4. Write the following in order of increasing energy.

   red, orange, yellow, green, blue, indigo, violet

5. State the relationship between energy, frequency and wavelength.
   High energy = high frequency = short wavelength

Line spectra

- The three types of line spectra are continuous, absorption, and emission spectra.

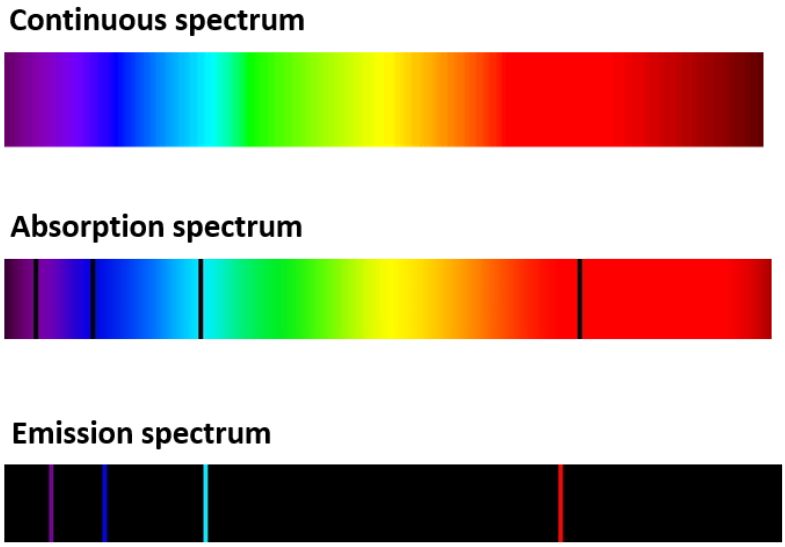

- A continuous spectrum shows all the wavelengths, or frequencies, of visible light.
- An absorption spectrum shows black lines on a coloured background.
- An emission spectrum shows coloured lines on a black background.
- Each element has unique absorption and emission spectra and they can be used to identify unknown elements.

Exercises

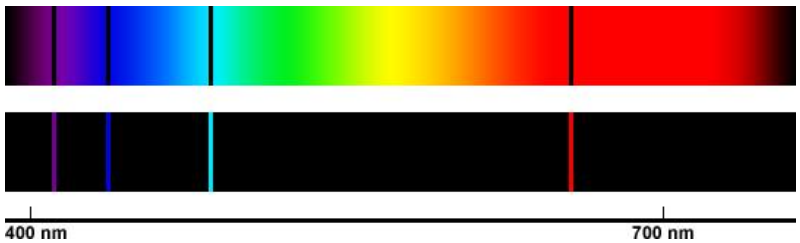

1. Classify the spectra above as absorption or emission spectra.

   Top spectrum is absorption, bottom one is emission.

2. Describe the difference between the two spectra.

   Emission spectra have coloured lines on a black background, absorption spectra have black lines on a coloured background.

How are line spectra produced?

- The Bohr model of the atom has the protons and neutrons located in the nucleus and the electrons located in energy levels around the nucleus.

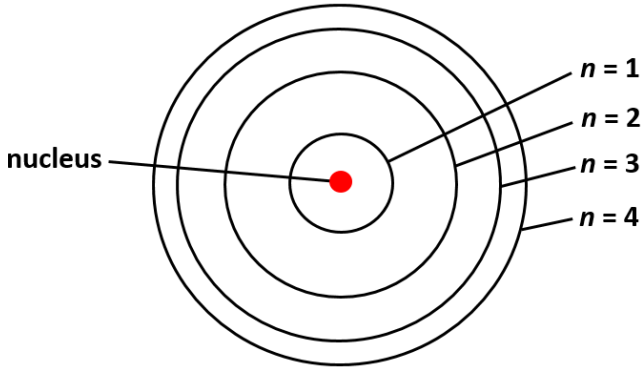

- Electrons can only exist within energy levels and electrons in the same energy level have the same amount of energy.
- Electrons can transition (move) between energy levels by either absorbing or emitting specific amounts of energy.
- If an electron absorbs a specific amount of energy, it will transition to a higher energy level (for example from *n*=1 to *n*=2).
- If an electron emits a specific amount of energy, it will transition to a lower energy level (for example *n*=4 to *n*=2).
- The energy is in the form of small packets of energy called photons and is related to the position of the light in the electromagnetic spectrum by the equation below (note that the use of this equation will not be assessed).

$$E = hv$$

E = energy
h = Plank's constant 6.63×10^{-34} J s^{-1}
v = frequency

Summary:

- Electrons are located in energy levels within the atom.
- Electrons can only exist at certain energy levels.
- Electrons can transition to higher energy levels by absorbing energy.
- Electrons can transition to lower energy levels by emitting energy.

Emission spectra

- The emission line spectrum of hydrogen is shown below.
- It has four coloured line on a black background that converge at high energy.

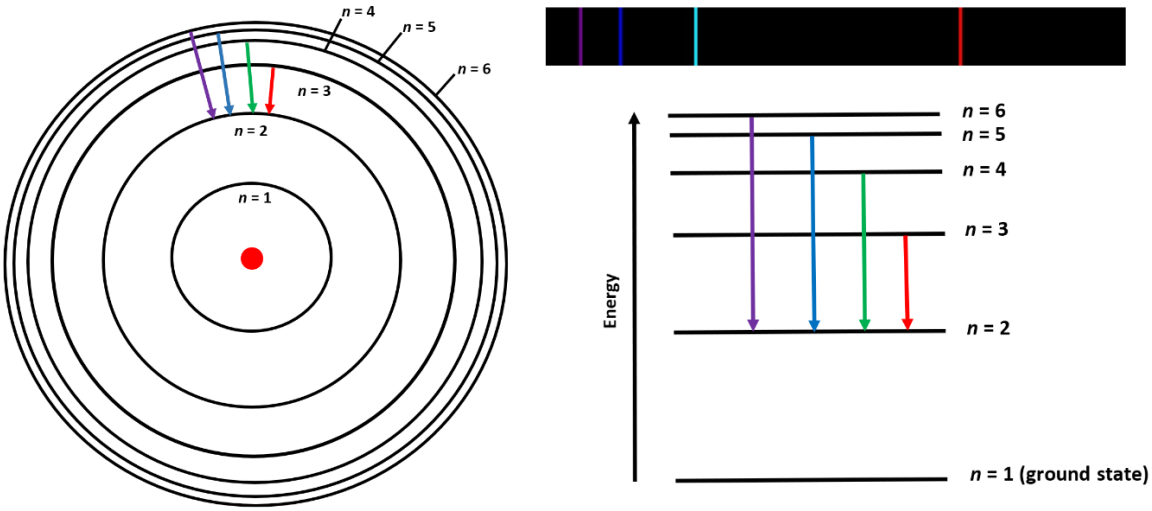

- The emission spectrum above is produced when an electron emits energy and transitions to a lower energy level (to *n*=2).
- The energy emitted by the electron corresponds to the wavelength, or frequency, of visible light.
- For example, when an electron transitions from *n*=3 to *n*=2, the energy that is emitted corresponds to the wavelength, or frequency, of red light. This explains why a red line appears in the emission spectrum.

Absorption spectra

- The absorption line spectrum of hydrogen is shown below.
- It has four black lines on a coloured background.

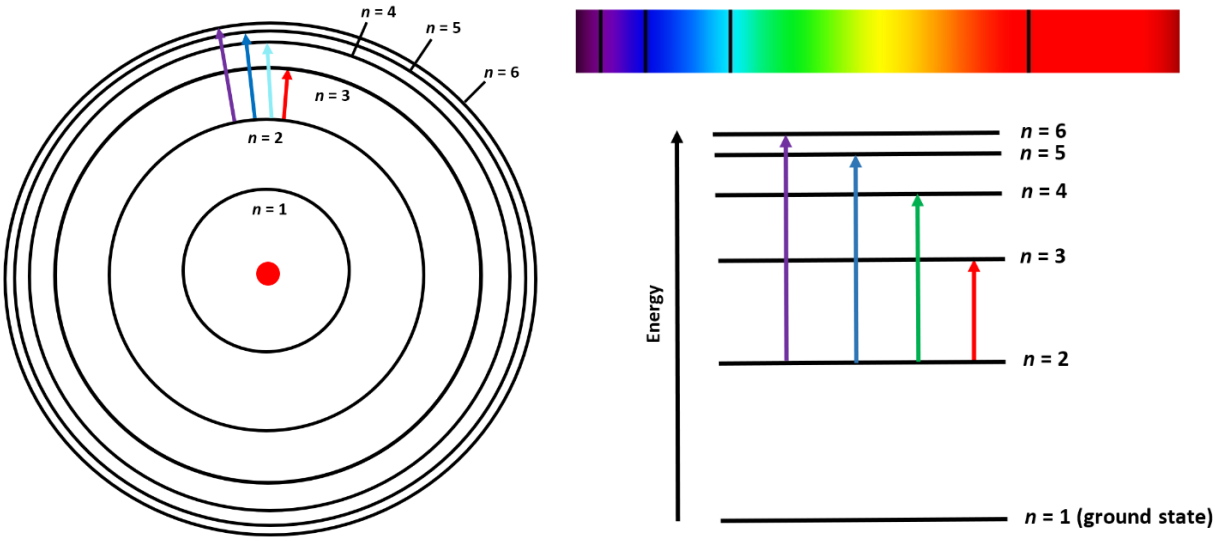

- The absorption spectrum above is produced when an electron absorbs energy and transitions to a higher energy level (from *n*=2).
- The energy absorbed by the electron corresponds to the to the wavelength, or frequency, of visible light.
- For example, when an electron transitions from *n*=2 to *n*=3, the energy that is absorbed corresponds to the wavelength, or frequency, of red light. This explains why the colour red is missing in the absorption spectrum.

The hydrogen emission spectrum

- The hydrogen emission spectrum is shown below.

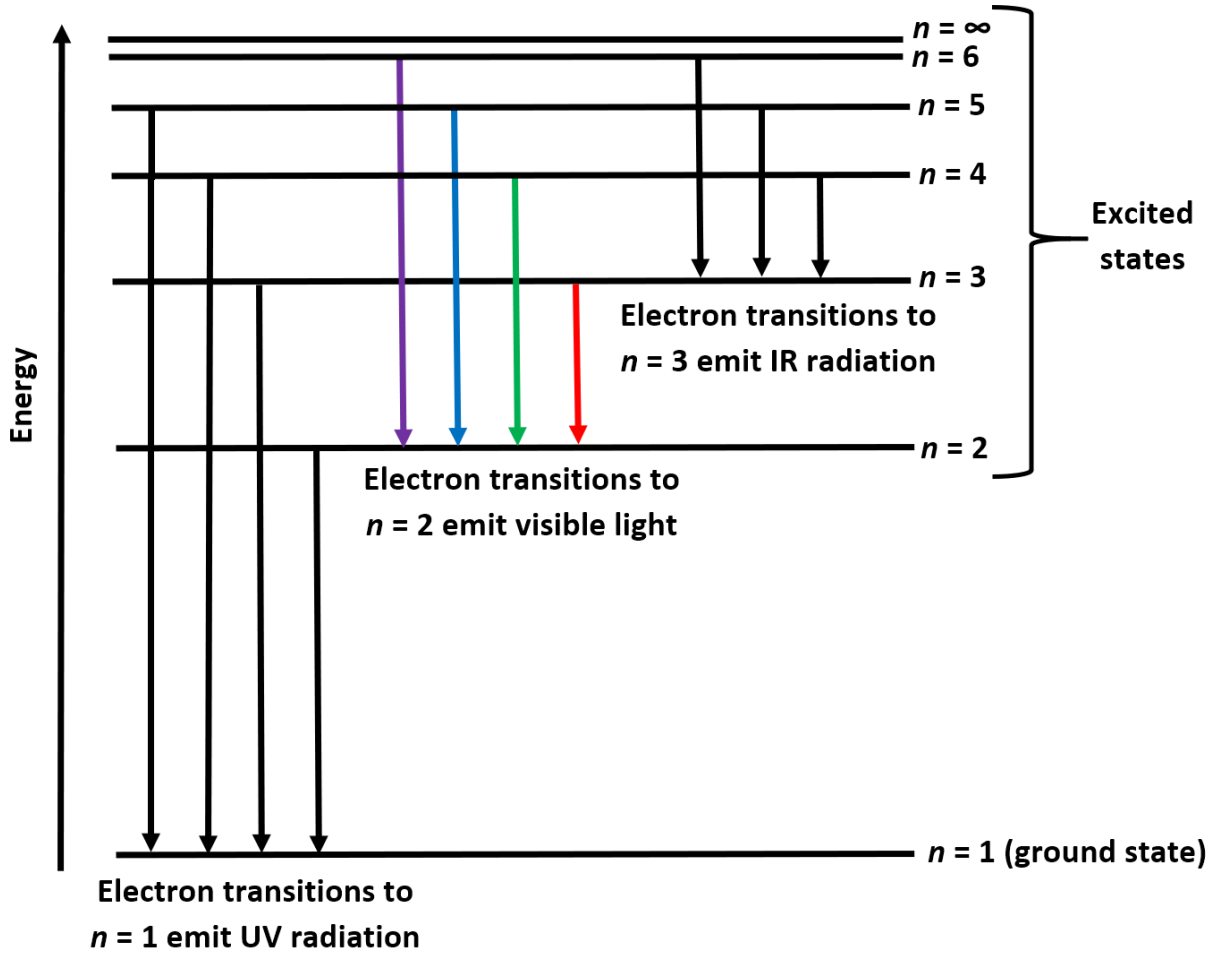

- Electron transitions to the first energy level (n=1) release the highest amount of energy and are in the UV region of the electromagnetic spectrum.
- Electron transitions to the n=2 energy level emit energy that corresponds to the frequency, or wavelength of visible light.
- Electron transitions to the n=3 energy level emit energy in the infrared region of the electromagnetic spectrum.
- The longer the arrow, the greater the amount of energy emitted (or absorbed).
- Higher energy corresponds to higher frequency and shorter wavelength.
- Lower energy corresponds to lower frequency and longer wavelength.

Exercises

1. What is absorbed when an electron transitions from a lower energy level to a higher energy level?

   Electrons absorb energy when they transition from lower to higher energy levels.

2. What is emitted when an electron transitions from a higher energy level to a lower energy level?

   Electrons emit energy when they transition from higher to lower energy levels.

3. Do spectral lines converge at high energy or low energy?

   Spectral lines converge at high energy which corresponds to high frequency and short wavelength.

4. Electron transitions to n=1 emit which type of electromagnetic radiation?

   Electron transitions to n=1 emit UV radiation.

5. Electron transitions to n=2 emit which type of electromagnetic radiation?

   Electron transitions to n=2 emit visible light.

6. Electron transitions to n=3 emit which type of electromagnetic radiation?

   Electron transitions to n=3 emit IR radiation.